CITY OF RIVERTON
MOBILE HOME REQUIREMENTS

Welcome to Riverton! As you can see, we do things a little differently than most communities where you have resided. We apply the International Residential Code (IRC) as well as the Riverton Municipal Codes (RMC) to regulate mobile home parks and provide for the safety of our citizens. This packet should provide you with the necessary information to enable you to set your home and have it connected to utilities in a short amount of time. General questions may be directed to 856-2999.

NOTE: If your home was constructed after 1976, it needs to meet the GFCI electrical standards as outlined in the HUD Construction and Safety Standards dated October 1994. Homes built in 1976 and older will not be allowed due to electrical wiring concerns of these older models.

General Information

1. A permit is required to set all manufactured and mobile homes within the City Limits. A permit may be obtained at the Community Development Dept at City Hall, 816 N. Federal. There is a fee for this permit - $75 for a single wide; $126 for double wide. Part of this fee is for **ONE** inspection. Additional hourly inspection fees can be charged to the homeowner.
2. You must site mobile home conforming to applicable Codes. Setbacks shall be verified to conform to RMC 17.80.050(2) (copy attached - Sheet No. 10 - "Siting Mobile Homes in MHP Districts").
3. Construct all exit facilities (stairs and landings) per Section R311 IRC (Appendix E, IRC 2006 Edition – applicable to manufactured homes installed on privately owned (non-rental lots) (copy of handouts #6 – "Stairways" and #7 – "Handrails" for your information and use). Landing size – minimum 3'x 3', stair tread dimension of 10 inches minimum depth and rise of 7 ¾ inches maximum, handrails placed 34-38 inches in height, with a gripping surface 1 ½ - 2 inches maximum. A guardrail is required when the landing is 30" or greater above finished grade. (Copy attached - shown on handout #6B).
   NOTE: The use of deck screws to construct your landing and stairs is NOT permitted. Deck screws are not allowed for connecting framing members. Structural or approved screws (for example, galvanized nails or structural screws such as star- or square-head) may be used.
4. All mobile homes are recommended to be "tied down" per Appendix E, IRC 2006 Edition.
5. Homes will be blocked every 8 linear feet. Blocks will be perpendicular to framing member. Blocks will not exceed 36 inches in total height. Blocks will be supported on either a concrete foundation or concrete pads with minimum area of 24 inches square by 4 inches thick. Wood is not allowed as the sole means of blocking.
6. **Street number must be posted on the front left side of home and be clearly seen from the street. REMOVE ALL OLD NUMBERS.**
7. Do **NOT** apply skirting to home until inspected and approved by City.

Electrical

1. Electrical contractor or homeowner who lives in the home shall connect mobile home to existing park owned electrical supply per National Electrical Code and RMC, inspect existing system for obvious deficiencies, and correct any deficiencies found.
2. Electrical service must be properly sized for home e.g. a home requiring 100 amp service cannot be connected to a 50 amp meter panel service.
3. Only a 50 amp service home may use the "plug in" power cord to the meter panel.
4. All service wiring between meter and point of entry into home must be in conduit – with exception to above #3.
5. **Exterior outlets and interior bathroom and kitchen outlets must be GFCI protected.**

Plumbing – Water/sewer

1. Water and sewer hookups must be completed by a licensed and registered contractor or performed by the tenant/homeowner residing in the home with his/her own hands.
2. The City of Riverton will supply the water meter and double check valve assembly (DCVA). You must establish an account with the City at this time – see "utility accounts" below.
3. The home must be protected from possible water pressure surges by installing an expansion tank near the water meter.
4. Sewer and water lines will be supported every 4 linear feet.
5. Water line, water meter, and DCVA will be freeze protected. Home owner is financially responsible for freeze damaged water meter and DCVA.
6. Sewer line cannot have any 90 degree elbows with exception to final elbow into connection point at ground level for main line.

Plumbing – Gas

1. A licensed plumbing contractor, or gas company representative, shall inspect, repair and support existing gas piping system as necessary to conform to International Fuel Gas Code, 2006 Edition.
2. Gas line must be tested for leaks by using a pressure test. System shall be pressured, using air, to 15-25 psi. Pressure test must be witnessed by City – see Inspection.

Inspection

1. The following items will be inspected by the City:
   A. Stairs and landings.
   B. Sewer and water line connections, DCVA and meter installation, supports, and verification of freeze protection.
   C. Electrical conduit, GFCI outlets, and interior circuit breaker panel.
   D. Gas test – must be witnessed by City. Line must be under pressure as stated above. The park manager, a licensed plumber, or Source Gas can assist you on setting up this test prior to inspection.
   E. Street number on home.

Once the above items **A thru E are completed**, please call for an inspection 856-2999. City personnel will inspect above items and witness the gas test. Once the gas line test is completed, a green colored tag will be hung on the gas line. An additional green tag may be hung on the electrical service panel.

Utility Accounts

Once the green tag(s) is in place, you may call the gas and electric utility companies for respective services. For gas service call Source Gas Service Center at 800-563-0012. For electric service call Rocky Mountain Power at 888-221-7070. Utility field personnel will need to see the green tag(s) on home prior to making their connections or setting meter.

The City of Riverton Utility Department requires a $160 deposit for the water meter and check valve, and a $50 turn on fee for water and sewer. Please call 856-2227 or stop by the Utility Department at City Hall, 816 N. Federal, to establish your City utility account.

As you can see, numerous homes do not have stairs and landings at both exits nor are they "tied down". These homes were in place prior to the City adopting newer Codes. As time goes on, all homes will meet Code for the occupant's safety. We thank you for your cooperation!!

Siting Mobile Homes In MHP Districts

Notes:

1. Existing utility locations will vary from Park to Park and from Lot to Lot

2. The oval ⬭ dimensions shown are code minimums.

3. The boxes ▭ are provided for your use. Provide this completed sheet when you apply for your permit.

All data taken from Riverton Municipal Code chapter 17.80.

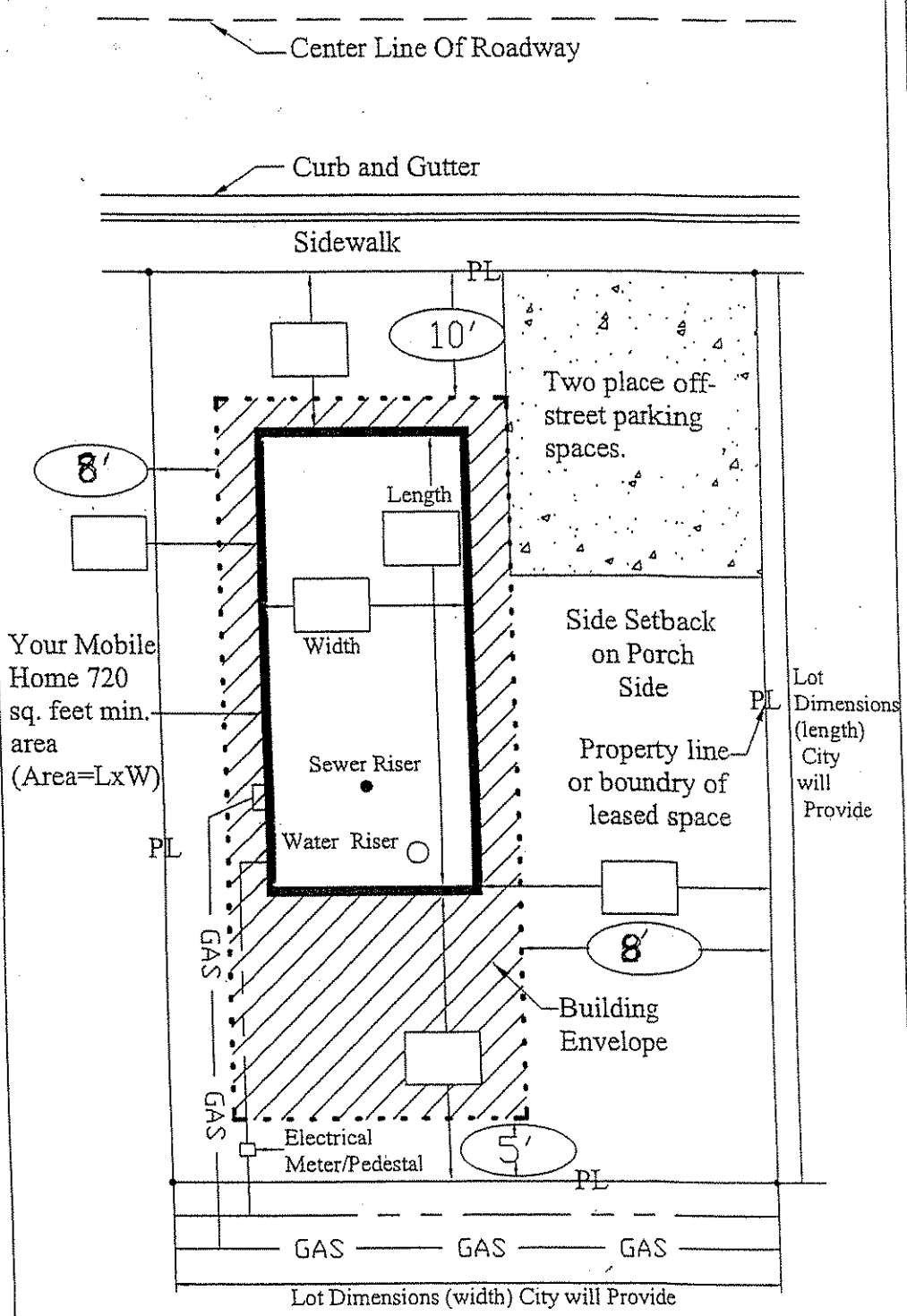

Job Address:		City of Riverton
Permit Number:		Building Department
Date:	Space #:	Sheet No. 10 | 8-26-03

Stairways

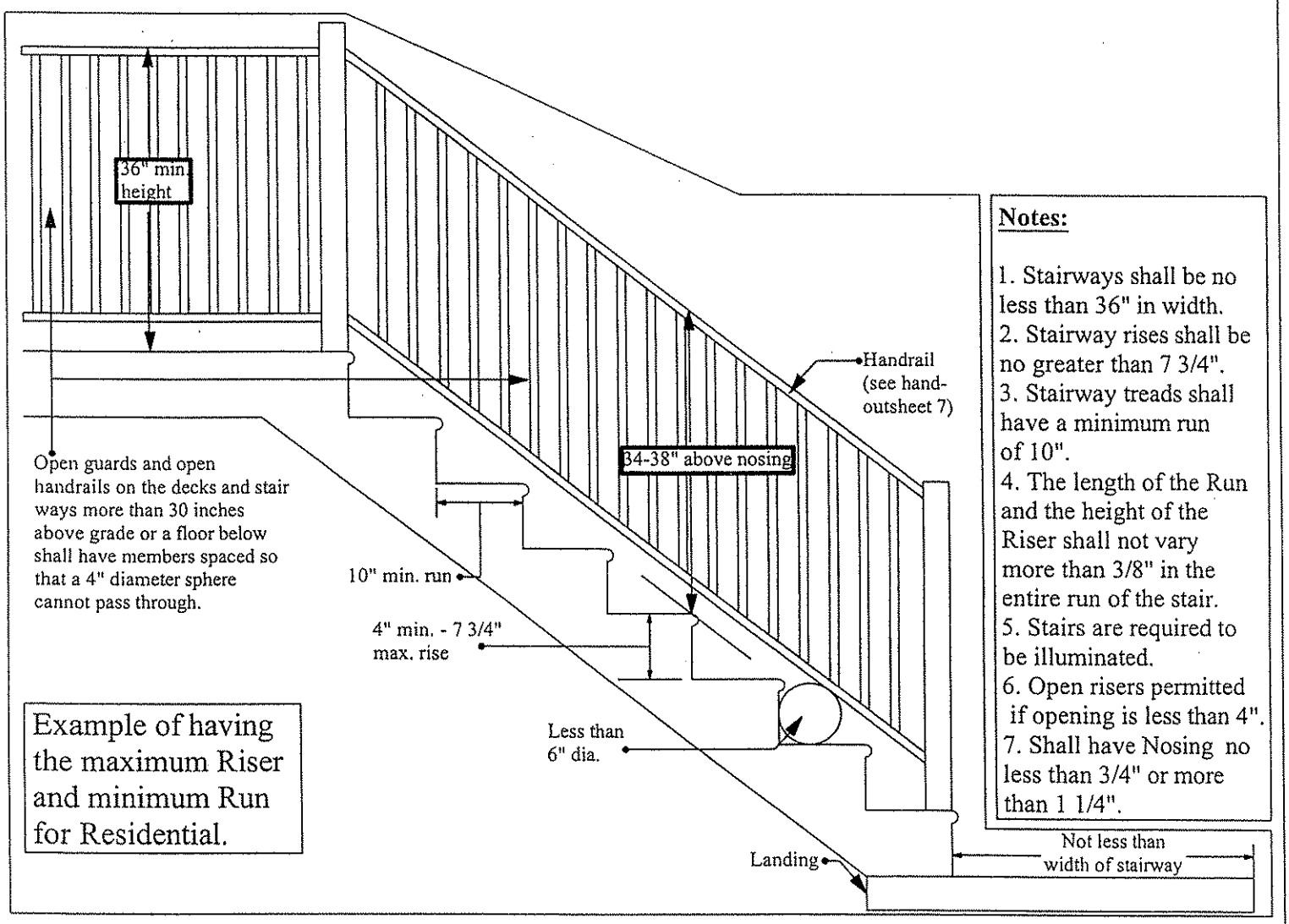

Example of having the maximum Riser and minimum Run for Residential.

Notes:

1. Stairways shall be no less than 36" in width.
2. Stairway rises shall be no greater than 7 3/4".
3. Stairway treads shall have a minimum run of 10".
4. The length of the Run and the height of the Riser shall not vary more than 3/8" in the entire run of the stair.
5. Stairs are required to be illuminated.
6. Open risers permitted if opening is less than 4".
7. Shall have Nosing no less than 3/4" or more than 1 1/4".

Job Address:		City of Riverton
Permit Number:		Building Department
Date:		Sheet No. 6B 4-18-05

Handrails

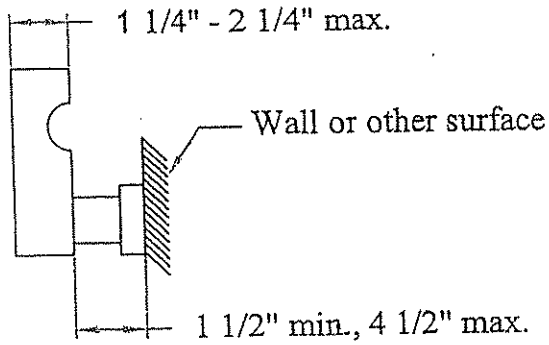

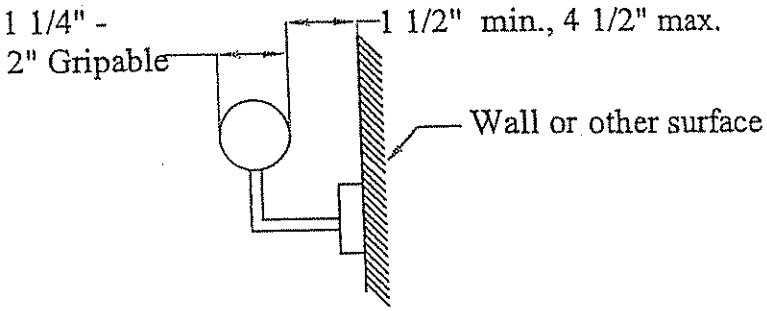

Not intended to cover all circumstances.
Other shapes or styles may be acceptable.

Notes:

1. Handrails shall be continious on at least one side of the stairs with 2 or more risers.
2. Handrails shall be placed not less than 34 inches nor more than 38 inches above stair nosing or ramp surface.
3. The handgrip portion of handrails shall be not less than 1 1/4 inches nor more than 2 1/4 inches in circular cross section.
4. Handrails shall be placed not less than 1 1/2 inches from any wall or other surface
5. More details referenced IBC 2006 Edition, Section 1009.11.

Job Address:		City of Riverton
Permit Number:		Building Department
Date:		Sheet No. 6C 7-1-05